Croquette trays A5 kraft

SKU: 9987043-A

General information

Product type	Chips and snack trays
EAN code	8720053673960
HS code	4819
Recyclable	-
DOCs	-
Pieces per box	400
Size	A5
Color	Kraft
Material	Cardboard
Paper thickness	-
Coating	PE



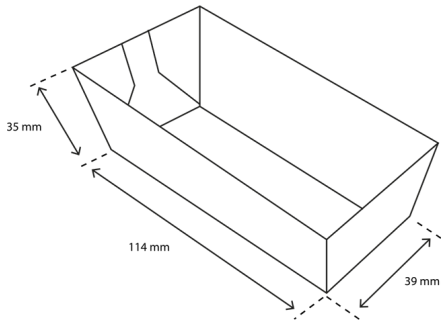

Dimensions and weight

Length	114 mm
Width	39 mm
Height	35 mm
Diameter	-
Capacity	-
Weight per piece	4,8 gram

Packaging

Length	-
Width	-
Height	-
Weight per colli	5,5 gram
Boxes per pallet	54

Also printable

TakeAware
Dublinweg 4, 9744 VB, Groningen
www.takeaware.nl

Contact
info@takeaware.nl
+31 50 747 0003